# TUTORIAL – 2 ANSWERS

1. Convert the hexadecimal number 64CD to binary, and then convert it from binary to octal.

   Ans: $(62315)_8$

2. Add and multiply the binary numbers 1011 and 101 without converting them to decimal.

   Ans: Sum = $(10000)_2$ Product = $(110111)_2$

3. Represent the decimal number 6248 in BCD.

   Ans: 0110 0010 0100 1000

4. Assign a binary code in an orderly manner to the 52 playing cards. Use the minimum number of bits.

   Ans:
   A standard deck of playing cards consists of 52 Cards in 4 suits of Spades, Hearts, Diamonds, and Clubs. Each suit contains 13 cards: Ace, 2, 3, 4, 5, 6, 7, 8, 9, 10, Jack, Queen, King.
   6 bits are required. Assign 2 MSBs for the suit, 00 = Spade, 01 = Heart, 10 = Diamond and 11 = Club. The remaining 4 bits can be assigned as Ace = 0001, 2 = 0010, 3 = 0011, 4 = 0100, ….,10 = 1010, Jack = 1011, Queen = 1100 and King = 1101.

   Example: Jack of Spades? Answer: 00 1011

5. Simplify the following Boolean expression to TWO literals:

   $$ABC'D + A'BD + ABCD$$

   Draw logic diagrams of the circuits that implement the original and simplified expressions. What is the hardware reduction achieved using the simplified expression?

Ans: $AB\bar{C}D + \bar{A}BD + ABCD = BD$

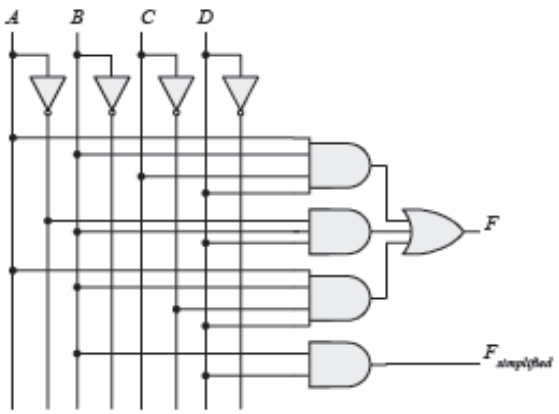


Original Boolean expression implementation requires 2 NOT, 3 AND and 1 OR gates.

Simplified Boolean expression (i.e., B.D) requires only 1 AND gate.

6. For the combinational logic circuit shown in Fig. 2-1, assume that the delay of each gate is $T_d$. Express the critical path delays in terms of $T_d$ to obtain $F_1$ and $F_2$.

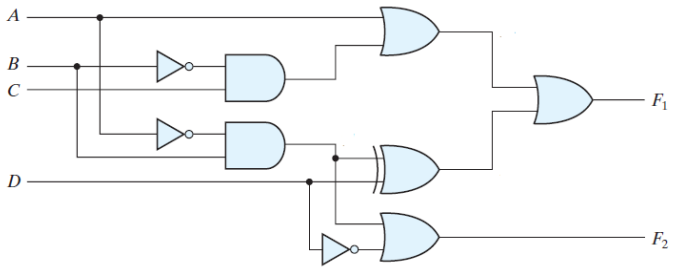


**Figure 2-1**

Ans: Critical path delay to obtain $F_1 = 4T_d$

Critical path delay to obtain $F_2 = 3T_d$

7. What logic gate realization is required to turn on the light bulb in Fig. 2-2?

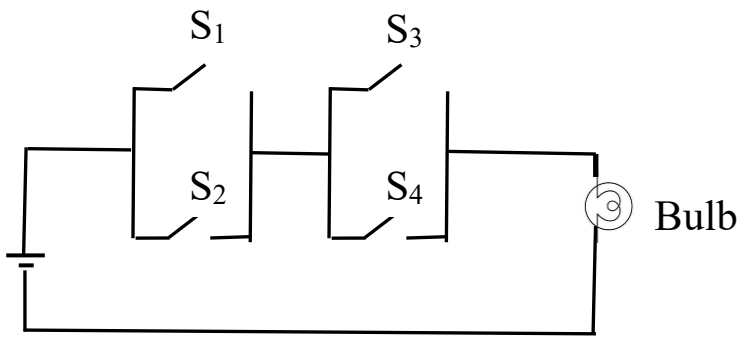


**Figure 2-2**

Ans: ($S_1$ OR $S_2$) AND ($S_3$ OR $S_4$)

8. For the combinational logic gate circuit shown in Fig. 2-3, the output Y is 0. What are the possible values of the inputs A, B, C and D that satisfy the given output value?

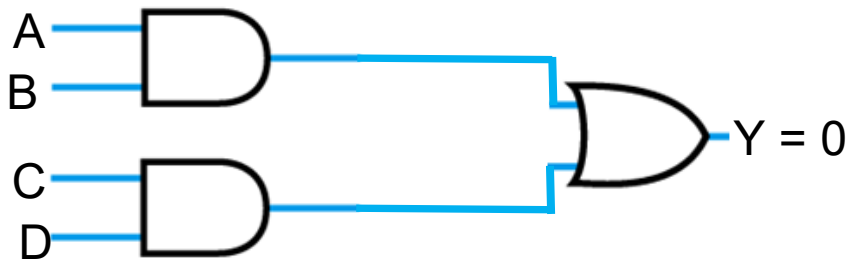


**Figure 2-3**

Ans:

| A | B | C | D | Y |
|---|---|---|---|---|
| 0 | 0 | 0 | 0 | 0 |
| 0 | 0 | 0 | 1 | 0 |
| 0 | 0 | 1 | 0 | 0 |
| 0 | 0 | 1 | 1 | 1 |
| 0 | 1 | 0 | 0 | 0 |
| 0 | 1 | 0 | 1 | 0 |
| 0 | 1 | 1 | 0 | 0 |
| 0 | 1 | 1 | 1 | 1 |
| 1 | 0 | 0 | 0 | 0 |
| 1 | 0 | 0 | 1 | 0 |
| 1 | 0 | 1 | 0 | 0 |
| 1 | 0 | 1 | 1 | 1 |
| 1 | 1 | 0 | 0 | 1 |
| 1 | 1 | 0 | 1 | 1 |
| 1 | 1 | 1 | 0 | 1 |
| 1 | 1 | 1 | 1 | 1 |

9. The output waveform 'Q' and clock 'CLK' of a D flip-flop is given in Fig. 2-4. Which of the following is (are) the correct input waveform(s)?

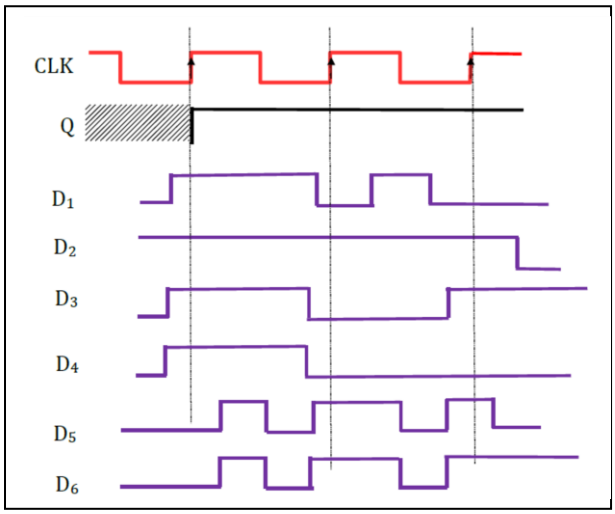


**Figure 2-4**

Ans: $D_2$

END OF DOCUMENT